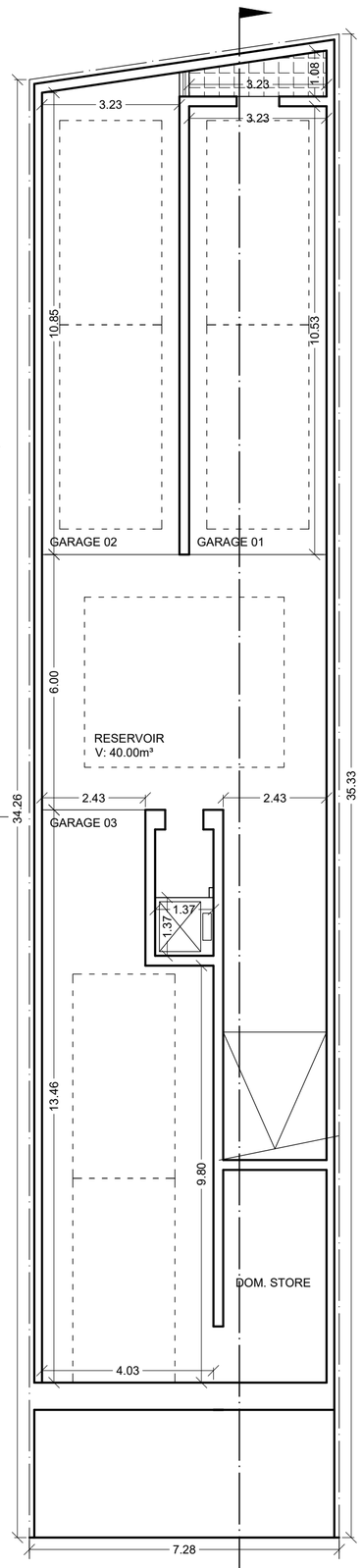

LEVEL -1
AS PROPOSED

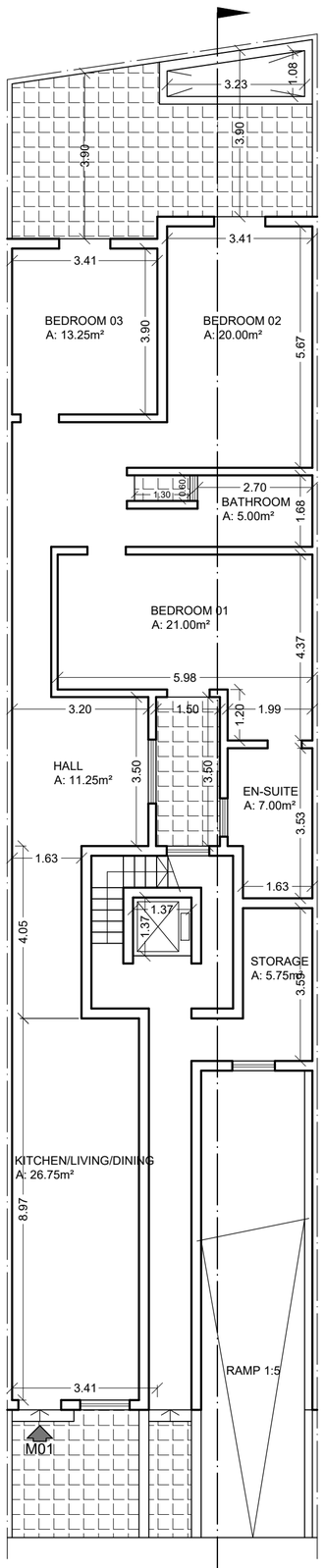

LEVEL 0
AS PROPOSED

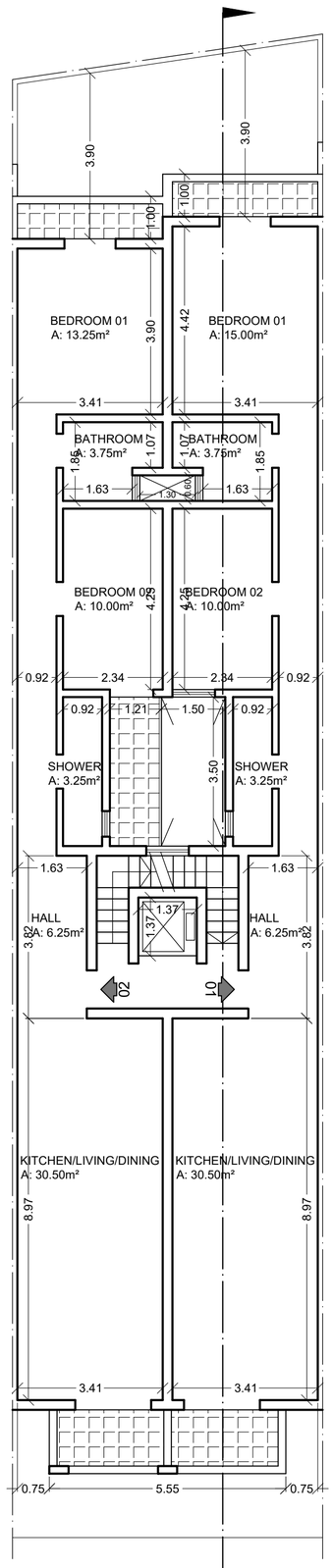

LEVEL 1
AS PROPOSED

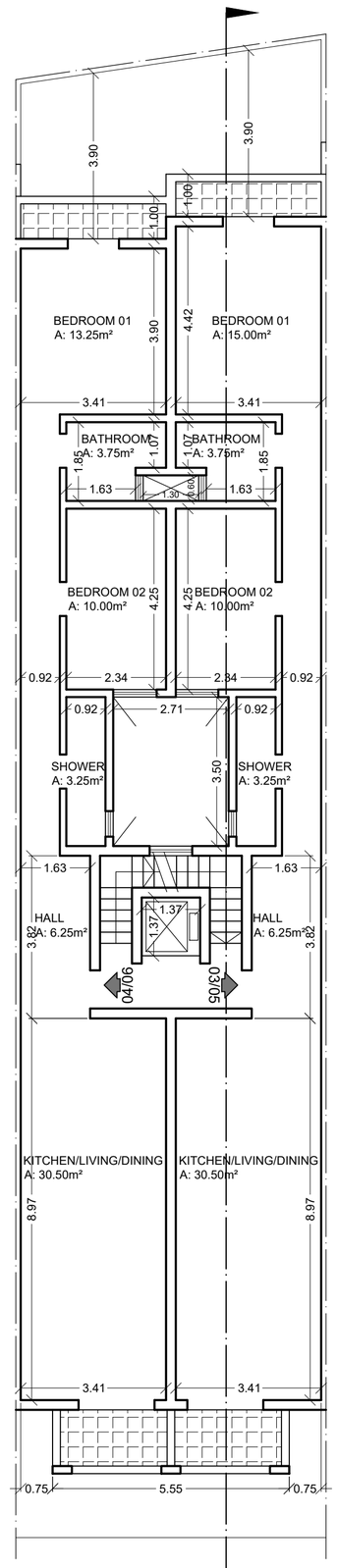

LEVEL 2 & 3
AS PROPOSED

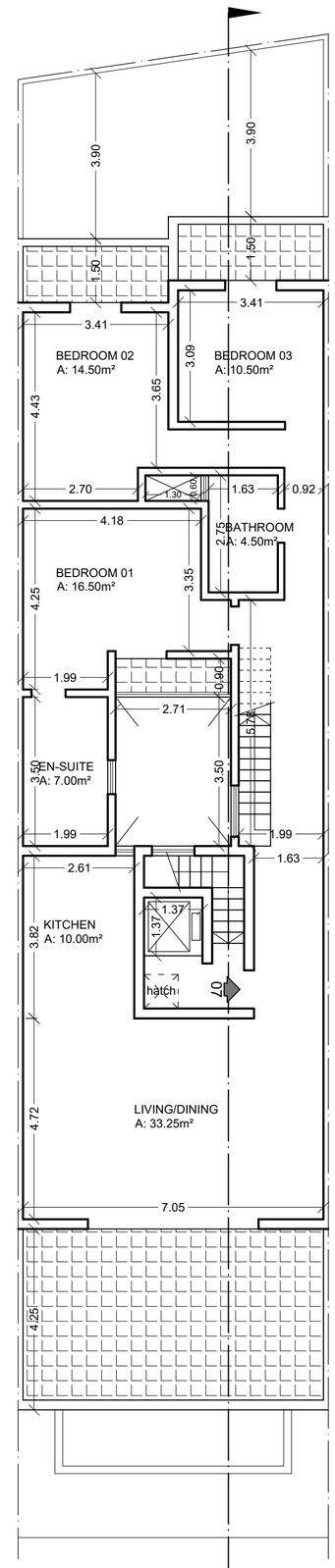

LEVEL 4
AS PROPOSED

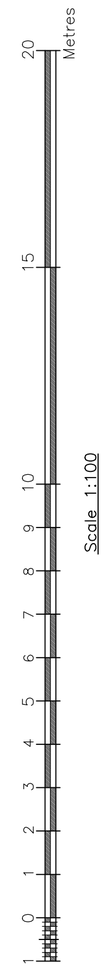

Site Area = 253.25m²

(Includes Yards, Terraces & Common Areas)

Level 0
M01 = 139.00m² (Ext. 37.00m²)

Level 1
Flat 01 = 90.00m² (Ext. 6.50m²)
Flat 02 = 88.00m² (Ext. 10.75m²)

Level 2 & 3
Flat 03/05 = 90.00m² (Ext. 6.50m²)
Flat 04/06 = 88.00m² (Ext. 6.50m²)

Level 4
Flat 07 = 136.00m² (Ext. 43.00m²)

Total Usable Area

(Excludes non-habitable areas)

Level 0
M01 = 81.00m²

Level 1
Flat 01 = 55.50m²
Flat 02 = 53.75m²

Level 2 & 3
Flat 03/05 = 55.50m²
Flat 04/06 = 53.75m²

Level 4
Flat 07 = 84.75m²

Colour Legend:

- Red to be Erected
- Yellow to be Removed
- Blue as Erected but not Approved
- Green as Approved but not Erected

Rev.	Description	Date

a. fenech vella B.Arch, A&CE, AClarb

architect & civil engineer

office: 45, Ta' Xbiex Sea Front, Msida, tel.: 21340369

job : Proposed Flats & Garages 32&34,Triq A. Shembri,Attard

desc: Plans Lvl -1 to 4

scale : 1:100	sheet 2	set of	rev	file: 18:028
client : Mr. Mifsud				
drawn by : M.G.				
date : 06/12/2018				